EXAMPLE 5.1

The disk shown is rotating with an angular velocity $\omega = 2t^2 + 3t + 1$ Determine:

a. The velocity of point A after 1 s.
b. The acceleration of point B after 2 s.
c. The number of revolutions after 5 s.

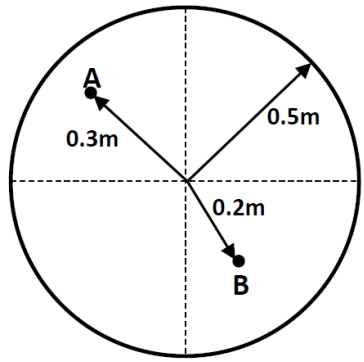

SOLUTION

$v_A = r_A \omega$

$When\ t = 1\ s$

$\omega = 2 \times 1^2 + 3 \times 1 + 1 = 6\ rad/s$

$v_A = 0.3 \times 6 = 1.8\ m/s$

$a_B = \sqrt{{a_t}^2 + {a_n}^2}$

$a_n = r_B \omega^2$

$When\ t = 2\ s$

$\omega = 2 \times 2^2 + 3 \times 2 + 1 = 15\ rad/s$

$a_n = 0.2 \times 15^2 = 45\ m/s^2$

$a_t = r_B \alpha$

$\alpha = \dfrac{d\omega}{dt} = 4t + 3$

$When\ t = 5\ s$

$\alpha = 4 \times 2 + 3 = 11\ rad/s$

$a_t = 0.2 \times 11 = 2.2\ m/s^2$

$a_B = \sqrt{2.2^2 + 45^2} = 45.05\ m/s^2$

$\omega = \frac{d\theta}{dt} = 2t^2 + 3t + 1$

$d\theta = [2t^2 + 3t + 1]dt$

$$\int_0^{\theta} d\theta = \int_0^5 [2t^3 + 3t + 1]dt$$

$$[\theta]_0^{\theta} = \left[\frac{2}{3}t^3 + \frac{3}{2}t^2 + t\right]_0^5$$

$$\theta = \left[\frac{2}{3} \times 5^3 + \frac{3}{2} \times 5^2 + 5\right] = 125.83\, rad$$

$$\theta = 2\pi \times N$$

$$N = \frac{\theta}{2\pi} = \frac{125.83}{2 \times 3.14} = 20.026\, rev$$

EXAMPLE 5.2

The block A is moving down a long a smooth plane with a constant acceleration = 10 m/s^2, starting from rest. After 2 seconds determine:

a. The angular velocity of the disk.
b. The angular acceleration of the disk.
c. The acceleration of point B.
d. The number of revolutions.

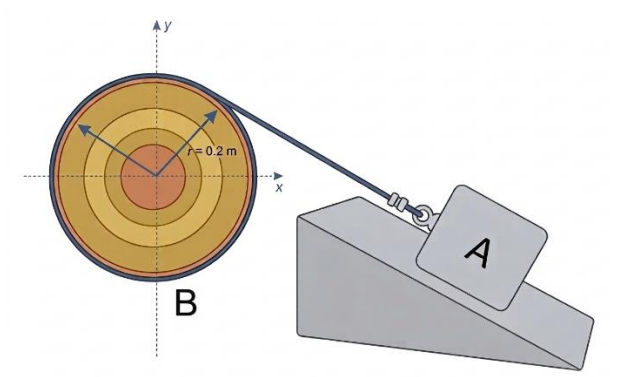

SOLUTION

$v = v_0 + at$

$v = 0 + 10 \times 2 = 20\ m/s$

$v = \omega r$

$20 = \omega \times 0.2$

$\omega = 100\ rad/s$

$a = r\alpha$

$10 = 0.2\alpha$

$\alpha = 50\ rad/s^2$

$a_B = \sqrt{{a_t}^2 + {a_n}^2}$

$a_n = r\omega^2 = 0.2 \times 100^2 = 2000\ m/s^2$

$a_t = r\alpha = 0.2 \times 50 = 10\ m/s^2$

$a_B = \sqrt{10^2 + 2000^2} = 2000.025\ m/s^2$

$\omega^2 = {\omega_0}^2 + 2\alpha\theta$

$100^2 = 0^2 + 2 \times 50 \times \theta$

$\theta = 100\ rad$

$N = \dfrac{\theta}{2\pi} = \dfrac{100}{2 \times 3.14} = 15.92\ rev$

EXAMPLE 5.3

Pulley A is given an angular acceleration $\alpha_A = 16t^4\ rad/s^2$ and an initial angular velocity 10 rad/s. determine the distance the load L moved when $t = 2\ s$.

$r_A = 0.3\ m, \qquad r_B = 0.6\ m, \qquad r_C = 0.4\ m, \qquad r_D = 0.8\ m$

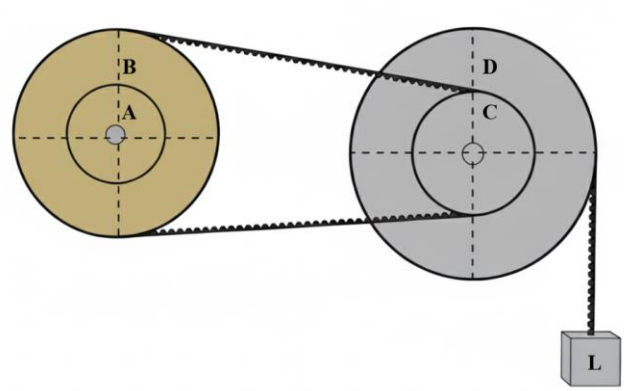

SOLUTION

$$\alpha_A = \frac{d\omega_A}{dt} = 16t^4$$

$$\int_{10}^{\omega_A} d\omega_A = \int_0^t [2t^3 + 3t + 1]dt$$

$$[\omega_A]_{10}^{\omega_A} = \left[\frac{16}{5}t^5\right]_0^t$$

$$\omega_A - 10 = \left[\frac{16}{5}t^5\right] - \left[\frac{16}{5} \times 0^5\right]$$

$$\omega_A = \frac{16}{5}t^5 + 10$$

$$\omega_A = \frac{d\theta_A}{dt} = \frac{16}{5}t^5 + 10$$

$$\int_0^{\theta_A} d\theta_A = \int_0^2 \left[\frac{16}{5}t^5 + 10\right] dt$$

$$[\theta_A]_0^{\theta_A} = \left[\frac{16}{30}t^6 + 10t\right]_0^2$$

$$\theta_A - 0 = \left[\frac{16}{30} \times 2^6 + 10 \times 2\right] - \left[\frac{16}{30} \times 0^6 + 10 \times 0\right]$$

$$\theta_A = 54\ rad$$

$$\theta_B = \theta_A = 54\ rad$$

$$r_C\theta_C = r_B\theta_B$$

$$0.4 \times \theta_C = 0.6 \times 54$$

$$\theta_C = 81\, rad$$

$$\theta_D = \theta_C = 81\, rad$$

$$S_L = r_D \theta_D = 0.8 \times 81 = 64.8\, m$$

EXAMPLE 5.4

If pulley A shown rotates with an angular acceleration $\alpha_A = 1.2t^2 + 10\, rad/s^2$, determine the velocity and the displacement of block G after 4 seconds starting from rest.

$r_A = 0.2\, m, \qquad r_B = 0.1\, m, \qquad r_C = 0.3\, m, \qquad r_D = 0.1\, m$

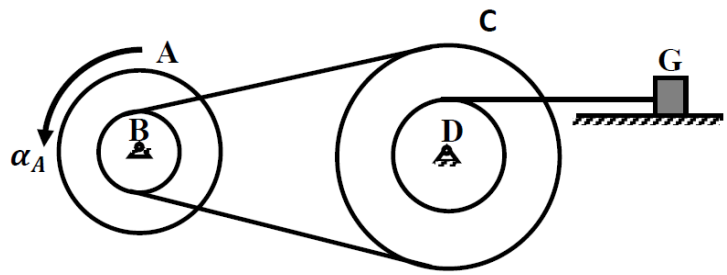

SOLUTION

$$\omega_A = \int_0^t \alpha_A dt = \int_0^t (1.2t^2 + 10)dt = 0.4t^3 + 10t$$

$$\theta_A = \int_0^t \omega_A dt = \int_0^t (0.4t^3 + 10t)dt = 0.1t^4 + 5t^2$$

$At\ t = 4\, sec$:

$$\omega_A = 65.6\, rad/s = \omega_B$$

$$\theta_A = 105.6\, rad = \theta_B$$

$$\omega_B r_B = \omega_C r_{BC}$$

$$\omega_C = \frac{65.6 \times 0.1}{0.3} = 21.87 rad/s = \omega_D$$

$$\theta_B r_B = \theta_C r_{BC}$$

$$\theta_C = \frac{105.6 \times 0.1}{0.3} = 21.87 rad/s = \theta_D$$

$$v_G = \omega_D r_D = 21.87 \times 0.15 = 3.28\, m/s$$

$$S_G = \theta_D r_D = 35.2 \times 0.15 = 5.28\, m$$

PROBLEMS

5-1 The disk shown is rotating with an angular acceleration $\alpha = 3t^2 + 2t + 2$. Determine.

a. The velocity of point A on the disk after 2 seconds if $r_A = 0.2\ m$.
b. The acceleration of point B o the disk after 1 second if $r_B = 0.3\ m$.
c. The number of revolutions after 10 seconds.

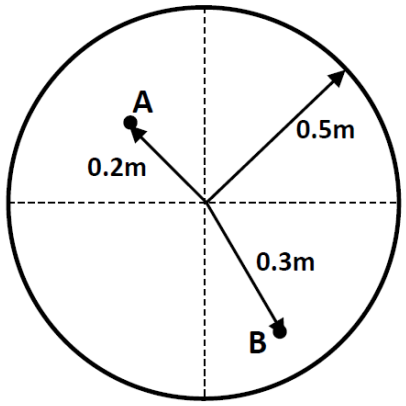

5-2 Starting from rest, the acceleration of block A as it moves down a long a smooth plane is given by $a = 10t + 8\ m/s^2$ where t is the time in seconds. After 2 seconds determine:

a. The angular velocity of the disk.
b. The angular acceleration of the disk.
c. The acceleration of point B.
d. The number of revolutions.

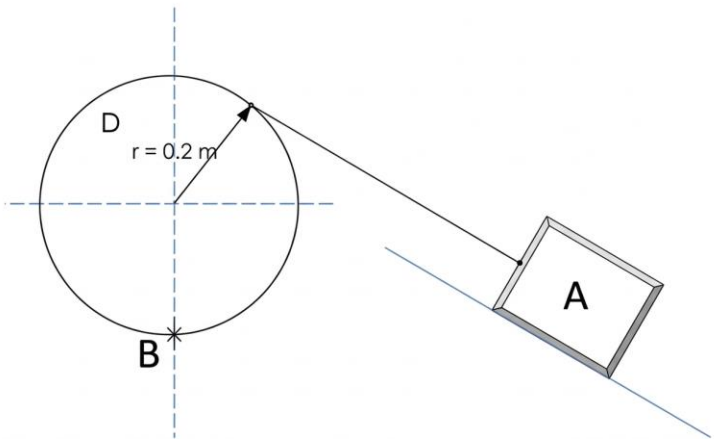

5-3 Starting from rest, the circular disk is moving with a constant angular acceleration. Its angular speed is $\omega = 150\ rad/s$ after 8 seconds. Determine the acceleration of point A after 10 seconds

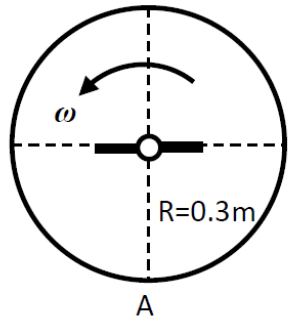

5-4 Pulley A shown is given an angular acceleration $\alpha_A = 12t + 24\ rad/s^2$. Determine the velocity of the block G after 4 seconds, starting from rest.
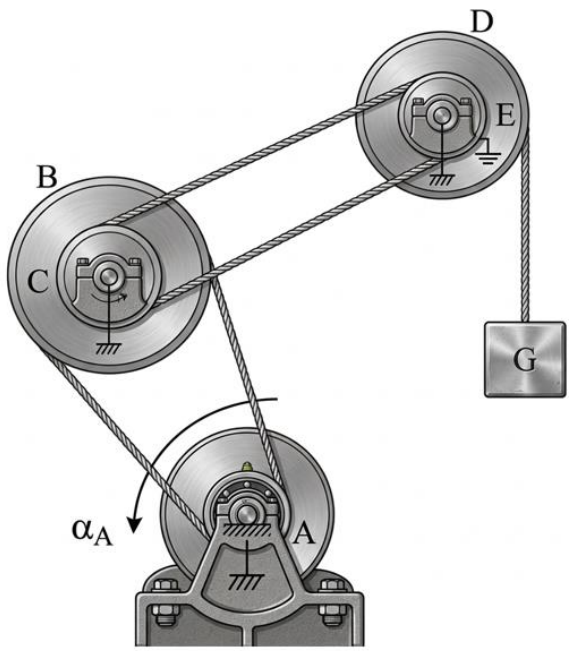
$r_A = 0.2\ m,\qquad r_B = 0.6\ m,\qquad r_C = 0.2\ m,\qquad r_D = 0.5\ m,\qquad r_E = 0.2\ m$